DRAWING MADE IN AMERICAN PROJECTION

C-160780

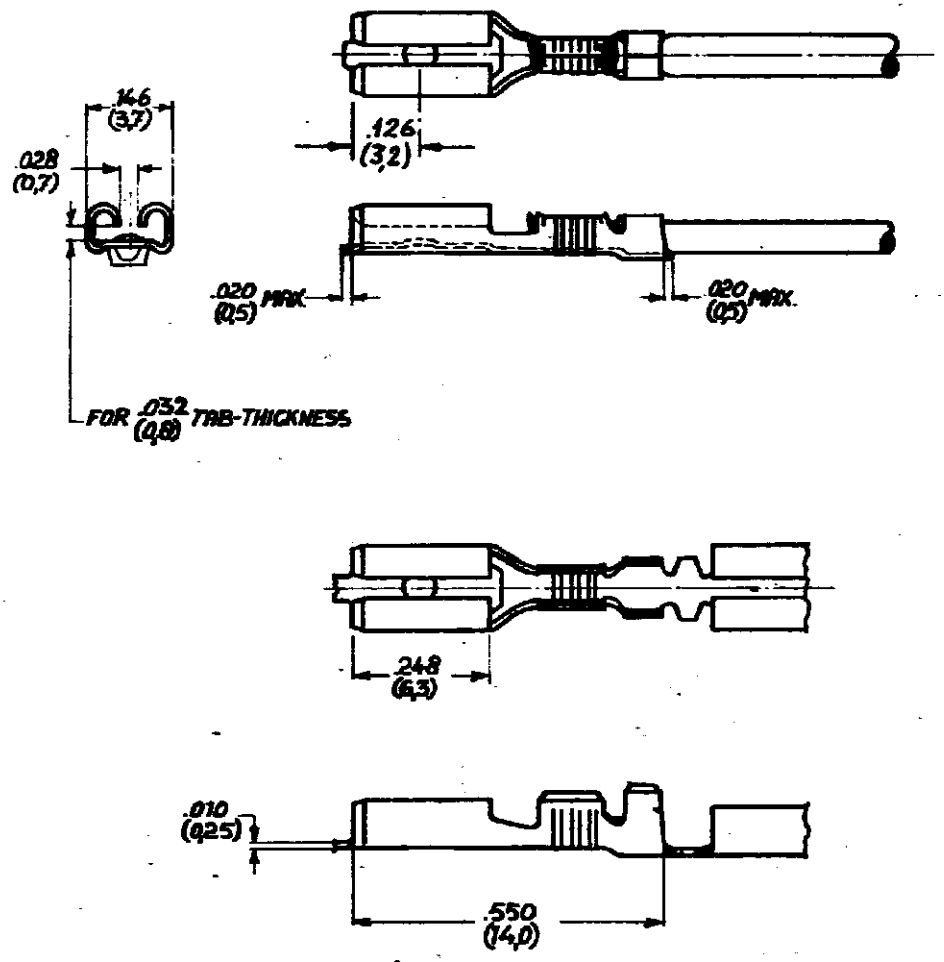

1 FOR AMP-O-MATOR APPLICATION.
2 REELED WITH PAPERCOVER.
3 REELED WITH PAPER LAYER.

ORDER NO.	MATERIAL	PLATING
160780-6	BRASS	— 1 2
160780-5	PHOSPHOR BR	TIN 1 2
160780-4	BRASS	TIN 1
160780-3	BRASS	— 1
160780-2	PHOSPHOR BR	TIN 1
160780-1	PHOSPHOR BR	— 1

DR A.W.M.B DATE 27.4.82 DR DATE
CHK DATE 27.4.82 APP DATE

CUSTOMER COPY FOR REFERENCE ONLY

AMP-HOLLAND N.V.
'S-HERTOGENBOSCH
HOLLAND

WIRE RANGE 0,5-1,5 mm² | INSUL. RANGE | FIRST USED

SCALE 4≈1 | LOC H | SIZE A | NO. C-160780 | REV C

NAME 110 Ser. FASTON RECEPT

DIMENSIONS IN (MM) DO NOT SCALE PRINT